INTERCHANGEABLE BUSHINGS

PRODUCT **PAGE**

INDEX B-1

QD

Installation/Removal B-2

Steel Bushings B-3

Standard Bushings B-4

Weld-On Hubs B-5

QD Short Bushings B-6

TAPER BUSHINGS

Installation/Removal B-7

1008 — 3030 . . . . . B-8

3535 — 5050 . . . . . B-9

6050 — 120100 . . . . . B-10

Weld-On Hubs B-11

Reborable Bushings B-12

MST® BUSHINGS

Bushing Specifications B-13

Installation & Removal B-14

Weld-On Hubs B-15

IDLER BUSHINGS; QD, MST® B-16

Stock QD Bushings

Martin MOUNTING PROCEDURE – QD BUSHINGS

IMPORTANT – BE SURE TAPERED CONE SURFACES OF QD BUSHING AND INSIDE OF SHEAVE OR SPROCKET HUB ARE DRY AND FREE OF ALL FOREIGN SUBSTANCES SUCH AS PAINT, GREASE, OR DIRT.

STANDARD Mounting Assembly FOR QD SHEAVES AND SPROCKETS

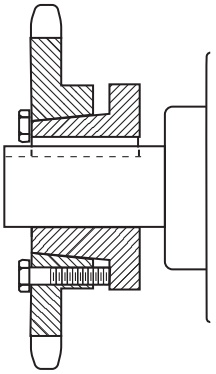

MOUNTING

1. Be sure the tapered cone surfaces of the bushing and the inside of the driven product are clean and free of anti-seize lubricants.
2. Slide QD bushing on shaft, flange end first. Assemble key.
3. Position QD bushing on shaft. Tighten set screw over key "hand tight" with standard Allen wrench only. Do not use excessive force.
4. Slide large end of sheave or sprocket taper bore into position over cone aligning drilled bolt holes in sheave or sprocket with tapped holes in flange of bushing. Assemble pull-up bolts and lock washers.

   NOTE: Install M thru S bushings in the hub so that the two extra holes in the hub are located as far as possible from the bushing's saw cut.
5. Tighten pull-up bolts alternately and evenly to tightness indicated in torque table on back. Do not use extensions on wrench handles. There should be a gap between the face of the sheave or sprocket hub and the flange of the QD bushing to insure a satisfactory cone grip and press fit.

   CAUTION: THIS GAP MUST NOT BE CLOSED.

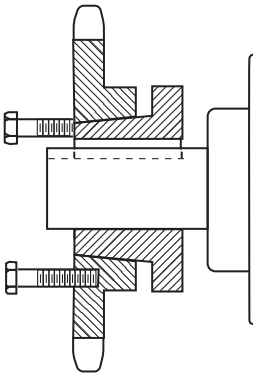

DISMOUNTING

1. Remove pull-up bolts and screw them into TAPPED holes in sheave or sprocket and against flange of QD bushing to break cone grip.
2. Loosen set screw and slide QD bushing from shaft.

WARNING: Because of the possible danger to person(s) or property from accidents which may result from the improper use of products, it is important that correct procedures be followed: Products must be used in accordance with the engineering information specified in the catalog. Proper installation, maintenance and operation procedures must be observed. The instructions given above must be followed. Inspections should be made as necessary to assure safe operation under prevailing conditions. All rotating power transmission products when used in a drive are potentially dangerous and must be guarded by the user as required by applicable laws, regulations, standards, and good safety practice. (Refer to ANSI Standard B15.1.)

REVERSE Mounting Assembly

FOR QD SHEAVES AND SPROCKETS USING JA, SH, SD, SDS, SK, SF, E, F, & J BUSHINGS

These bushings, as well as the sprockets and sheaves for them, are each drilled with six holes (three drilled and three tapped) to allow pull-up bolts to be inserted from either side. This enables variations of mounting characteristics to suit a particular installation.

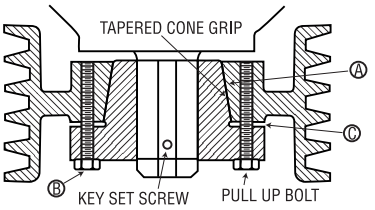

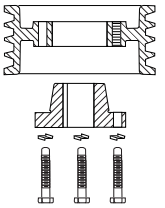

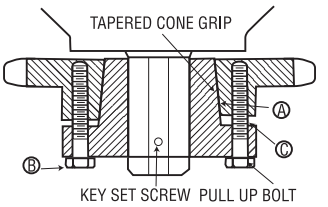

CAUTION

WARNING: USE OF ANTI-SEIZE LUBRICANT ON TAPERED CONE SURFACES OR ON BOLT THREADS WHEN MOUNTING MAY RESULT IN DAMAGE TO SHEAVES AND SPROCKETS. THIS VOIDS ALL MANUFACTURER'S WARRANTIES.

1. Be sure the tapered cone surfaces of the bushing and the inside of the driven product are clean and free of anti-seize lubricants.
2. Assemble sheave or sprocket with bolts inserted (But not tightened) through DRILLED holes in bushing flange into TAPPED holes in sheave, sprocket, or other Martin QD part.
3. With key in shaft keyseat, slide assembly into approximate position on shaft with flange end of bushing away from bearing.
4. Position QD bushing on shaft by tightening set screw over key "hand tight" with standard Allen wrench only. Do not use excessive force.
5. Tighten pull-up bolts alternately and evenly to tightness indicated in torque table below. Do not use extensions on wrench handles. There should be a gap between the face of the sheave or sprocket hub and the flange of the QD bushing to insure a satisfactory cone grip and press fit. CAUTION: THIS GAP MUST NOT BE CLOSED.

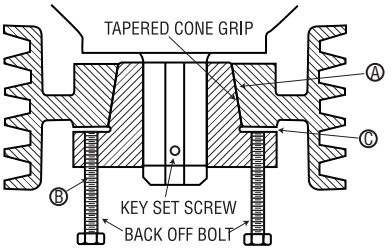

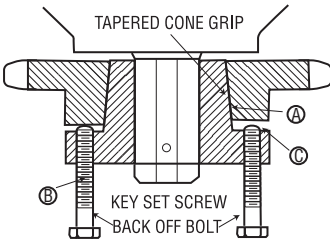

1. Remove pull-up bolts and screw them into TAPPED holes in bushing flange and against hub of sheave or sprocket to break cone grip.
2. Loosen set screw in bushing flange and slide QD bushing from shaft.

BOLT TORQUE TABLE

QD Bushing Size	Size of Cap Screw	Wrench Torque in. / lbs.
JA	10 - 24	60
SH, SDS, SD	1/4 - 20	108
SK	5/16 - 18	180
SF	3/8 - 16	360
E	1/2 - 13	720
F	9/16 - 12	900
J	5/8 - 11	1620
M	3/4 - 10	2700
N	7/8 - 9	3600
P	1 - 8	5400
W	1-1/8 - 7	7200
S	1-1/4 - 7	9000

All Steel QD Bushings

★F = Length of Mating Bore ★★G = Gap Between QD Bushing and Mating Hub

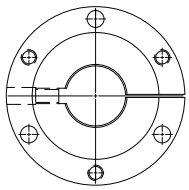

Bushings: "JA" to "J" inclusive

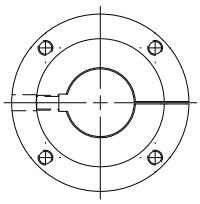

Bushings: "M" to "W" inclusive

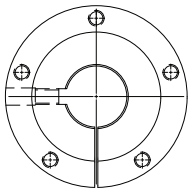

Bushing: "S"

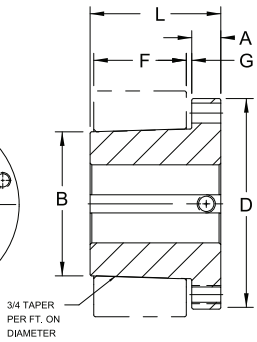

QD Bushings — Steel

Bushing	Dimensions (Inches) A	B	D	E	F	G	L	Cap Bolt Circle	Screws Required	Stock Bore Range Minimum	Maximum Standard Keyway	Maximum Shallow Keyway	Average Weight (Approx.)
SF-STL	9/16	3.125	4 5/8	1 1/2	1 1/4	1/8	2 1/16	3 7/8	3 3/8 x 2	1/2	2 5/16	2 13/16	3.0
E-STL	3/4	3.834	6	1 7/8	1 5/8	1/8	2 5/8	5	3 1/2 x 2 3/4	7/8	2 7/8	3 1/2	10.0
F-STL	13/16	4.437	6 5/8	2 13/16	2 1/2	3/16	3 5/8	5 5/8	3 9/16 x 3 3/8	1	3 5/16	4	11.5
J-STL	1	5.148	7 1/4	3 1/2	3 3/16	3/16	4 1/2	6 1/4	3 5/8 x 4 1/2	1 7/16	3 3/4	4 1/2	18.0
M-STL	1 1/4	6.500	9	5 1/2	5 3/16	3/16	6 3/4	7 7/8	4 3/4 x 6 3/4	2	4 3/4	5 1/2	37.0
N-STL	1 1/2	7.000	10	6 5/8	6 1/4	7/8	8 1/8	8 1/2	4 7/8 x 8 1/2	2 1/2	5 1/8	5 7/8	57.0

Bushing	Bores	Keyway
SF-STL	2 3/8 - 2 9/16 2 5/8 - 2 3/4 2 13/16 - 2 7/8 2 15/16	5/8 x 3/16 5/8 x 1/16 3/4 x 1/16 3/4 x 1/32
E-STL	7/8 - 2 7/8 2 15/16 - 3 1/4 3 5/16 - 3 1/2	STD. 3/4 x 1/8 7/8 x 1/16
F-STL	1 - 3 5/16 3 3/8 - 3 3/4 3 7/8 - 3 15/16 4	STD. 7/8 x 3/16 1 x 1/8 NONE
J-STL	3 7/16 - 3 3/4 3 13/16 - 4 1/2	STD. 1 x 1/8
M-STL	2 - 4 3/4 4 13/16 - 5 1/2	STD. 1 1/4 x 1/4
N-STL	2 1/2 - 5 1/8 5 3/16 - 5 1/2 5 9/16 - 5 7/8	STD. 1 1/4 x 1/4 1 1/2 x 1/4

Shallow Key Dimension — Standard			
Key Seat	Key	Keyway	Key
1/4 x 1/32	1/4 x 5/32	3/4 x 1/8	3/4 x 1/2
1/4 x 1/16	1/4 x 3/16	7/8 x 1/16	7/8 x 1/2
3/8 x 1/32	3/8 x 7/32	7/8 x 3/16	7/8 x 5/8
3/8 x 1/16	3/8 x 1/4	1 x 1/8	1 x 5/8
3/8 x 1/8	3/8 x 5/16	1 1/4 x 1/4	1 1/4 x 7/8
1/2 x 1/32	1/2 x 9/32	1 1/2 x 1/8	1 1/2 x 7/8
1/2 x 1/16	1/2 x 5/16	1 1/2 x 1/4	1 1/2 x 1
1/2 x 1/8	1/2 x 3/8	1 3/4 x 1/8	1 3/4 x 3/4
5/8 x 1/16	5/8 x 3/8	1 3/4 x 1/4	1 3/4 x 7/8
3/4 x 1/16	3/4 x 7/16	2 x 1/4	2 x 1

Standard Keyway and Key Dimension		
Bores	Keyway	Key
7/8	3/16 x 3/32	3/16 x 3/16
15/16 - 1 1/4	1/4 x 1/8	1/4 x 1/4
1 5/16 - 1 3/8	5/16 x 5/32	5/16 x 5/16
1 7/16 - 1 3/4	3/8 x 3/16	3/8 x 3/8
1 13/16 - 2 1/4	1/2 x 1/4	1/2 x 1/2
2 5/16 - 2 3/4	5/8 x 5/16	5/8 x 5/8
2 13/16 - 3 1/4	3/4 x 3/8	3/4 x 3/4
3 5/16 - 3 3/4	7/8 x 7/16	7/8 x 7/8
3 13/16 - 4 1/2	1 x 1/2	1 x 1
4 9/16 - 5 1/2	1 1/4 x 5/8	1 1/4 x 1 1/4
5 9/16 - 6 1/2	1 1/2 x 3/4	1 1/2 x 1 1/2
6 9/16 - 7 1/2	1 3/4 x 3/4	1 3/4 x 1 1/2
7 9/16 - 9	2 x 3/4	2 1/2 x 1 1/2
9 1/16 - 11	2 1/2 x 7/8	— —
11 1/16 - 13	3 x 1	— —

Bushing	Plain Bores Not Split
SH-STL	1/2
SD-STL	1/2
SK-STL	1/2
SF-STL	1 15/16
E-STL	7/8 - 1 15/16
F-STL	1 - 2 7/16 - 2 15/16
J-STL	1 7/16 - 2 15/16
M-STL	2 - 2 15/16
N-STL	2 7/16 - 4 15/16

Shallow Key Dimension — Steel			
Key Seat	Key	Keyway	Key
1/4 x 1/32	1/4 x 5/32	3/4 x 1/16	3/4 x 7/16
1/4 x 1/16	1/4 x 3/16	3/4 x 1/8	3/4 x 1/2
3/8 x 1/32	3/8 x 7/32	7/8 x 1/16	7/8 x 1/2
3/8 x 1/16	3/8 x 1/4	7/8 x 3/16	7/8 x 5/8
3/8 x 1/8	3/8 x 5/16	1 x 1/8	1 x 5/8
1/2 x 1/32	1/2 x 3/32	1 1/4 x 1/4	1 1/4 x 7/8
1/2 x 1/16	1/2 x 5/16	1 1/2 x 1/4	1 1/2 x 1
1/2 x 1/8	1/2 x 3/8	1 3/4 x 1/8	1 3/4 x 3/4
5/8 x 1/16	5/8 x 3/8	1 3/4 x 3/8	1 3/4 x 1
5/8 x 3/16	5/8 x 1/2	2 x 1/4	2 x 1

Reborable QD bushings made of Stainless Steel are available in many sizes. Non stock sizes are available on MTO basis.

Standard QD Bushings

Bushing	Dimensions (Inches) A	B	D	E	F	G	L	Bolt Circle	Cap Screws Required	Stock Bore Range Minimum	Maximum Standard Keyway	Maximum Shallow Keyway	Set Screw Size	Average Weight (Approx.)
JA	3/8	1.375	2	11/16	9/16	1/8	1 1/16	1.665	3-10 x 1	3/8	1	1 1/4	10-24	.9
SH	7/16	1.871	2 11/16	7/8	13/16	1/8	1 5/16	2 1/4	3-1/4 x 1 3/8	1/2	1 3/8	1 11/16	1/4	1
SDS	1/2	2.187	3 3/16	7/8	3/4	1/8	1 3/8	2 11/16	3-1/4 x 1 3/8	1/2	1 11/16	2	1/4	1
SD	1/2	2.187	3 3/16	1 5/16	1 1/4	1/8	1 13/16	2 11/16	3-1/4 x 1 7/8	1/2	1 11/16	1 15/16	1/4	1.5
SK	9/16	2.812	3 7/8	1 3/8	1 1/4	1/8	1 15/16	3 5/16	3-5/16 x 2	1/2	2 1/8	2 1/2	5/16	2
SF	9/16	3.125	4 5/8	1 1/2	1 1/4	1/8	2 1/16	3 7/8	3-3/8 x 2	1/2	2 5/16	2 13/16	5/16	3
E	3/4	3.834	6	1 7/8	1 5/8	1/8	2 5/8	5	3-1/2 x 2 3/4	7/8	2 7/8	3 1/2	3/8	10
F	13/16	4.437	6 5/8	2 13/16	2 1/2	3/16	3 5/8	5 5/8	3-9/16 x 3 5/8	1	3 5/16	3 15/16	1/2	11.5
J	1	5.148	7 1/4	3 1/2	3 3/16	3/16	4 1/2	6 1/4	3-5/8 x 4 1/2	1 7/16	3 3/4	4 1/2	5/8	18
M	1 1/4	6.500	9	5 1/2	5 3/16	3/16	6 3/4	7 7/8	4-3/4 x 6 3/4	1 15/16	4 3/4	5 1/2	3/4	37
N	1 1/2	7.000	10 1/4	6 5/8	6 1/4	1/4	8 1/8	8 1/2	4-7/8 x 8 1/2	2 7/16	5 1/8	6	3/4	57
P	1 3/4	8.250	11 3/4	7 5/8	7 1/4	1/4	9 3/8	10	4-1 x 9 1/2	2 15/16	5 15/16	7	7/8	120
W	2	10.437	15	9 3/8	9	1/4	11 3/8	12 3/4	4-1 1/8 x 11 1/2	4	7 1/2	8 1/2	1	250
S	3 1/4	12.125	17 3/4	12 1/2	12	3/8	15 3/4	15	5-1 1/4 x 15 1/2	6	8 1/4	10	1 1/4	400

Inch Bore

Bushing	Bores	Keyway
JA	3/8 - 7/16	NO K.W.
	1/2 - 1	STD.
	1 1/8 - 1 1/8	1/4 - 1/16
	1 3/16	1/4 - 1/16
	1 1/4	NO K.W.
SH	1/2 - 1 3/8	STD
	1 7/16 - 1 1/2	3/8 x 1/16
	1 9/16 - 1 5/8	3/8 - 1/16
	1 11/16	NO K.W.
SDS	1/2 - 1 11/16	STD.
	1 3/4	3/8 x 1/8
	1 13/16	1/2 x 1/8
	1 7/8 - 1 15/16	1/2 x 1/16
	2	NO K.W.
SD	1/2 - 1 11/16	STD.
	1 3/4	3/8 x 1/8
	1 13/16	1/2 x 1/8
	1 7/8	1/2 x 1/16
	1 15/16	1/2 x 1/16
	2	NO K.W.
SK	1/2 - 2 1/8	STD.
	2 3/16 - 2 1/4	1/2 x 1/8
	2 5/16 - 2 1/2	5/8 x 1/16
	2 9/16 - 2 5/8	NO K.W.
SF	1/2 - 2 1/4	STD.
	2 5/16 - 2 1/2	5/8 x 3/16
	2 9/16 - 2 3/4	5/8 x 1/16
	2 13/16 - 2 7/8	3/4 x 1/16
	2 15/16	3/4 x 1/32
E	7/8 - 2 7/8	STD.
	2 15/16 - 3 1/4	3/4 x 1/8
	3 3/8 - 3 1/2	7/8 x 1/16
	3 5/16	7/8 x 1/8
F	1 - 3 5/16	STD.
	3 3/8 - 3 3/4	7/8 x 3/16
	3 7/8 - 3 15/16	1 x 1/8
	4	NONE
J	1 1/4 - 3 3/4	STD.
	3 13/16 - 4 1/2	1 x 1/8
M	2 - 4 3/4	STD.
	4 13/16 - 5 1/2	1 1/4 x 1/4
N	2 7/16 - 5	STD.
	5 1/8 - 5 1/2	1 1/4 x 1/4
	5 9/16 - 6	1 1/2 x 1/4
P	2 15/16 - 5 15/16	STD.
	6 - 6 1/2	1 1/2 x 1/4
	6 9/16 - 7	1 3/4 x 1/8
W	4 - 7 1/2	STD.
	7 9/16 - 8 1/2	2 x 1/4

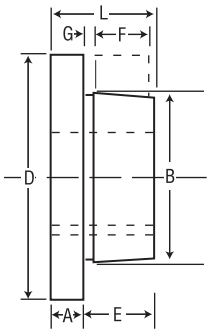

★Important — The metric system does not refer to keyseat or keyway dimensions as does the English system; instead dimensions are given for the key itself which is rectangular in shape, not square as in the English system.

NOTE:
.03937″=1mm
Ex—24 mm = 0.94488″

TO ORDER:
SH 24 mm

Millimeter Bore

Bushing	Bore MM	Key★ WXT
SH	24, 25 28, 30	8x7
	32, 35	10x8
SDS	24, 25 28, 30	8x7
	32, 35 38	10x8
	40, 42	12x8
SD	24, 25 28, 30	8x7
	32, 35 38	10x8
	40, 42	12x8
SK	24, 25 28, 30	8x7
	32, 35 38	10x8
	40, 42 48, 50 55	12x8 14x9 16x10
SF	28, 30	8x7
	32, 35 38	10x8
	40, 42 48, 50 55 60	12x8 14x9 16x10 18x11
E	35, 38 40, 42 48, 50 55 60, 65 70, 75	10x8 12x8 14x9 16x10 18x11 20x12
F	48, 50 55 60, 65 70, 75 80, 85 90	14x9 16x10 18x11 20x12 22x14 25x14
J	50 55 60, 65 70, 75 80, 85 90, 95 100	14x9 16x10 18x11 20x12 22x14 25x14 28x16

Keystock provided for nonstandard keyways.

QD & QD Short Weld-On Hubs

QD Weld-On Hubs

Martin QD Weld-On Hubs are suitable for use in many applications, such as welding to plate steel sprockets.

QD Weld-On Hubs are made of steel, drilled, tapped and taper bored for QD bushings

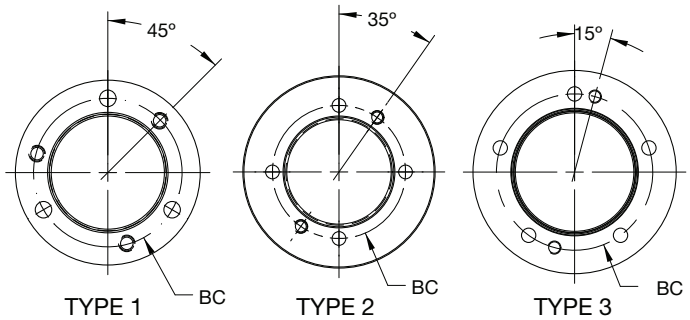

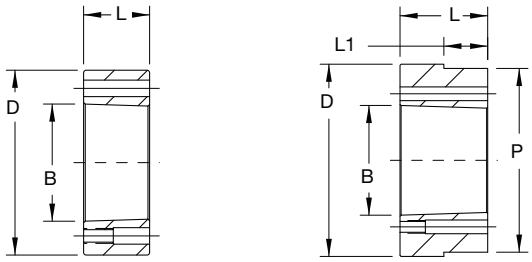

Catalog Number	Dimensions — Inches D★	L	B (nom)	P	L_1	BC	Type Drilling	Weight Pounds	Mounting
JA-A	2.250	9/16	1.37	2.125	3/16	1 23/32	1	.4	STD or Reverse Mount
SH-A	3.000	13/16	1.87	—	—	2¼	1	1	
SDS-A	3.500	¾	2.18	—	—	2 11/16	1	1.2	
SK-A	4.375	1¼	2.81	—	—	3 5/16	1	3	
SF-A	5.000	1¼	3.12	—	—	3⅞	1	4	
E-A	6.250	1⅝	3.83	—	—	5	1	9	
F-A	7.000	2½	4.44	—	—	5⅝	1	16	
J-A	7.750	3 3/16	5.14	—	—	6¼	1	22.5	
M-A	9.500	5 3/16	6.49	9.250	3 9/16	7⅞	2	50	STD Mount Only
N-A	10.500	6¼	6.99	10.250	4½	8½	2	75	
P-A	13.000	7¼	8.24	—	—	10	2	155	
W-A	15.500	9	10.43	—	—	12¾	2	300	
S-A	19.500	12	12.12	18.750	7½	15	3	558	

★Tolerance of D Dimension (or P dimension where applicable) JA-A Thru J-A = (+.000-.002) M-A Thru S-A = (+.000-.003)

QD Short Weld-On Hubs

Martin QD Short Weld-On Hubs are designed for use in conveyor pulleys.

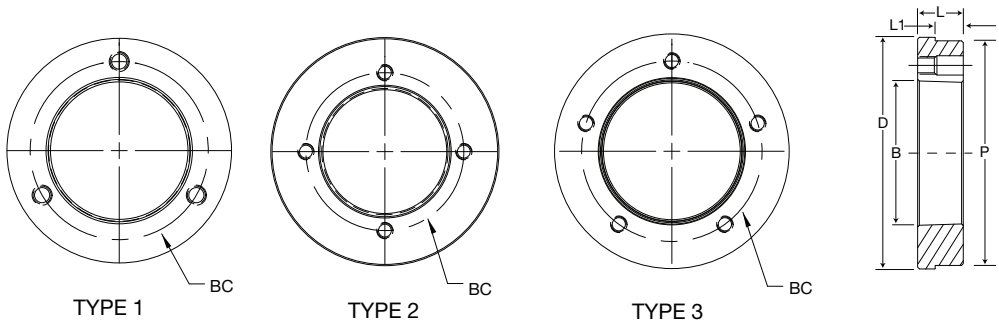

Catalog Number	Dimensions — Inches D	L	B (nom)	P*	L_1	BC	Type Drilling	Weight Pounds	Mounting
SFS-A	5.000	1	3.12	4.750	9/16	3⅞	1	3.0	Reverse Mount Only
ES-A	6.250	1⅛	3.83	6.000	⅝	5	1	5.5	
FS-A	7.000	1¼	4.44	6.750	11/16	5⅝	1	7.4	
JS-A	8.250	1⅝	5.14	8.000	1	6¼	1	13.8	
MS-A	9.500	2⅜	6.49	9.250	1⅝	7⅞	2	22.9	
NS-A	10.250	2⅜	6.99	10.000	1 9/16	8½	2	26.8	
PS-A	12.250	2⅞	8.24	12.000	2	10	2	47.9	
WS-A	15.250	3⅜	10.43	14.875	2 7/16	12¾	2	84.2	
SS-A	17.500	3⅞	12.12	17.000	2¾	15	3	121.8	

★Tolerance of P Dimension SFS-A Thru MS-A = (+.000-.004) NS-A Thru PS-A = (+.000-.005) WS-A Thru SS-A = (+.000-.006)

QD Short Bushings

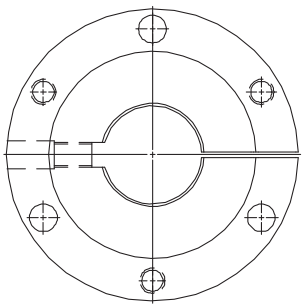

Bushings:
JS

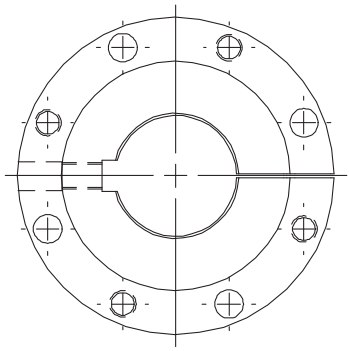

Bushings:
MS TO WS inclusive

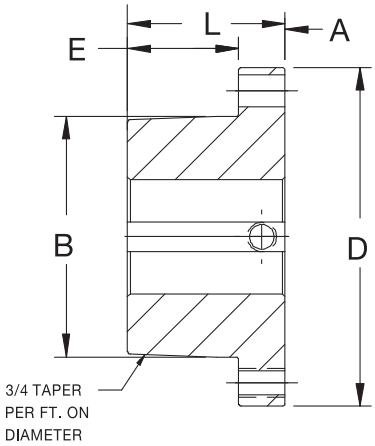

Inch Bore

Bushing	Bores	Keyway	Weight
JS	2 7/16	5/8 x 5/16	19
	2 15/16	3/4 x 3/8	17
	3 7/16	7/8 x 7/16	15
	3 1/2		15
	3 15/16	1 x 1/8	13
	4 7/16		10
MS	3 7/16	7/8 x 7/16	38
	3 1/2		37
	3 15/16	1 x 1/2	34
	4 7/16		30
	4 15/16	1 1/4 x 1/4	26
	5 7/16		21
	5 1/2		20
NS	3 15/16	1 x 1/2	54
	4 7/16		49
	4 15/16	1 1/4 x 5/8	43
	5 7/16	1 1/4 x 1/4	38
	5 1/2		37
	5 15/16	1 1/2 x 1/4	31
	6		30
PS	4 15/16	1 1/4 x 5/8	76
	5 7/16		70
	5 15/16	1 1/2 x 3/4	62
	6	1 1/2 x 1/4	62
	6 7/16		55
	6 1/2		54
	6 15/16	1 3/4 x 1/8	47
	7		45
WS	5 7/16	1 1/4 x 5/8	154
	5 15/16	1 1/2 x 3/4	145
	6		144
	6 7/16		136
	6 1/2		135
	6 15/16	1 3/4 x 3/4	126
	7		125
	7 1/2		114
	7 15/16	2 x 1/4	106
	8		105
	8 7/16		94
	8 1/2		93

Martin QD Short Bushings are suitable for use in belt conveyor applications wherever the short hubs of a conveyor pulley require the QD Short Bushing style.

Dimensions

Bushing	Dimensions (Inches)						Cap Screws Requirred	Set Screw Size
	A	B	D	E	L	Bolt Circle		
JS	1.00	5.1484	7.25	2.38	3.38	6.25	5/8 x 2 1/2 (3)	5/8
MS	1.19	6.5000	9.00	3.62	4.81	7.88	3/4 x 3 (4)	3/4
NS	1.50	7.0000	10.00	4.50	6.00	8.50	7/8 x 3 1/2 (4)	3/4
PS	1.50	8.2500	11.75	5.00	6.50	10.00	1 x 4 (4)	7/8
WS	1.75	10.4370	15.00	5.50	7.25	12.75	1 1/8 x 5 (4)	1

All dimensions are in inches, weight in pounds.

Taper Bushings

IMPORTANT NOTE: Please follow the instructions on this sheet in order for the Martin bushing to perform satisfactorily.

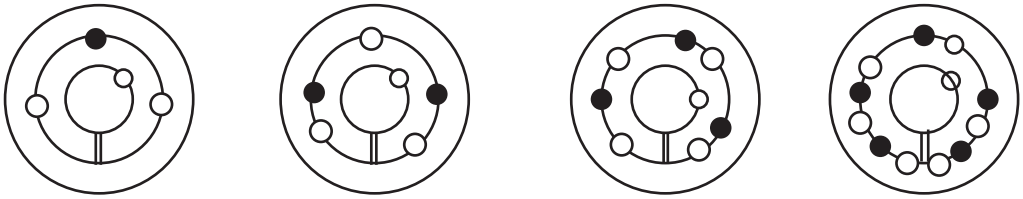

1008 to 3030 **3535 to 6050** **7060 to 10085** **102100**

INSTALLATION

1 Clean all oil, dirt, and paint from shaft, bushing bore, outside of bushing and component (sprocket, sheave...etc.) bore.
2 Insert bushing into component. Match the hole pattern, not the threaded holes (each hole will be threaded on one side only.)
3. Thread set or cap screws into those half threaded holes indicated by ❍ on above diagram. Mount assembly on shaft.
4. Alternately torque set or cap screws* to recommended torque setting in chart below.
5. On 3535 and larger bushings use a block, sleeve or drift and hammer large end of bushing (do not hammer bushing directly).
6. Repeat steps 4 and 5 until torque wrench reading, after hammering, is the same as before hammering.
7. Fill all unoccupied holes with grease.

REMOVAL

1. Remove all set or cap screws.
2. Insert set or cap screws in holes indicated by ● on drawing. Loosen bushing by alternately tightening set or cap screws.
3. To reinstall, complete all seven (7) installation instructions.

RECOMMENDED TORQUE TABLE

Bushing No.	Set or Cap Screw	Wrench Torque in. / lbs.
1008, 1108	1/4 - 20 Socket Set Screw	55
1210, 1215, 1310	3/8 - 16 Socket Set Screw	175
1610, 1615	3/8 - 16 Socket Set Screw	175
2012	7/16 - 14 Socket Set Screw	280
2517, 2525	1/2 - 13 Socket Set Screw	430
3020, 3030	5/8 - 11 Socket Set Screw	800
3535	1/2 - 13 Socket Head Cap Screw	1,000
4040	5/8 - 11 Socket Head Cap Screw	1,700
4545	3/4 - 10 Socket Head Cap Screw	2,450
5050	7/8 - 9 Socket Head Cap Screw	3,100
6050, 7060, 8065	1-1/4 -7 Socket Head Cap Screw	7,820
10085, 120100	1 - 1/2 - 6 Socket Head Cap Screw	13,700

* If two bushings are used on same component and shaft, fully tighten one bushing before working on the other.

CAUTION

WARNING: USE OF ANTI-SEIZE LUBRICANT ON TAPERED CONE SURFACES OR ON BOLT THREADS WHEN MOUNTING MAY RESULT IN DAMAGE TO SHEAVES AND SPROCKETS. THIS VOIDS ALL MANUFACTURER'S WARRANTIES.

WARNING: Because of the possible danger to person(s) or property from accidents which may result from the improper use of products, it is important that correct procedures be followed: Products must be used in accordance with the engineering information specified in the catalog. Proper installation, maintenance and operation procedures must be observed. The instructions given above must be followed. Inspections should be made as necessary to assure safe operation under prevailing conditions. All rotating power transmission products when used in a drive are potentially dangerous and must be guarded by the user as required by applicable laws, regulations, standards, and good safety practice. (Refer to ANSI Standard B15.1.)

Taper Bushings Dimensions

No. 1008 to 3030 Taper Bushings

Bushing Number	Bore	Wt.	Bushing Keyseat	Shaft Keyseat
1008	½ to 9/16	.27	⅛ x 1/16	⅛ x 1/16
	⅝ to ⅞	.21	3/16 x 3/32	3/16 x 3/32
	15/16 to 1	.16	¼ x 1/16 ▼	¼ x ⅛
1108	½ to 9/16	.33	⅛ x 1/16	⅛ x 1/16
	⅝ to ⅞	.27	3/16 x 3/32	3/16 x 3/32
	15/16 to 1	.22	¼ x ⅛	¼ x ⅛
	1 1/16 to 1⅛	.17	¼ x 1/16 ▼	¼ x ⅛
1210	½ to 9/16	.61	⅛ x 1/16	⅛ x 1/16
	⅝ to ⅞	.55	3/16 x 3/32	3/16 x 3/32
	15/16 to 1¼	.49	¼ x ⅛	¼ x ⅛
1215	½ to 9/16	.8	⅛ x 1/16	⅛ x 1/16
	⅝ to ⅞	.7	3/16 x 3/32	3/16 x 3/32
	15/16 to 1¼	.6	¼ x ⅛	¼ x ⅛
1310	½ to 9/16	.7	⅛ x 1/16	⅛ x 1/16
	⅝ to ⅞	.7	3/16 x 3/32	3/16 x 3/32
	15/16 to 1¼	.6	¼ x ⅛	¼ x ⅛
	1 5/16 to 1⅜	.6	5/16 x 5/32	5/16 x 5/32
1610	½ to 9/16	.9	⅛ x 1/16	⅛ x 1/16
	⅝ to ⅞	.8	3/16 3/32	3/16 3/32
	15/16 to 1¼	.7	¼ x ⅛	¼ x ⅛
	1 5/16 to 1⅜	.7	5/16 x 5/32	5/16 x 5/32
	1 7/16 to 1½	.6	⅜ x 3/16	⅜ x 3/16
	1 9/16 to 1⅝	.5	⅜ x ⅛ ▼	⅜ x 3/16
1615	½ to 9/16	1.2	⅛ x 1/16	⅛ x 1/16
	⅝ to ⅞	1.1	3/16 x 3/32	3/16 x 3/32
	15/16 to 1¼	1.0	¼ x ⅛	¼ x ⅛
	1 5/16 to 1⅜	.8	5/16 x 5/32	5/16 x 5/32
	1 7/16 to 1½	.7	⅜ x 3/16	⅜ x 3/16
	1 9/16 to 1⅝	.6	⅜ x ⅛ ▼	⅜ x 3/16
2012	½ to 9/16	1.7	⅛ x 1/16	⅛ x 1/16
	⅝ to ⅞	1.6	3/16 x 3/32	3/16 x 3/32
	15/16 to 1¼	1.5	¼ x ⅛ ▼	¼ x ⅛
	1 5/16 to 1⅜	1.4	5/16 x 5/32	5/16 x 5/32
	1 7/16 to 1¾	1.2	⅜ x 3/16	⅜ x 3/16
	1 13/16 to 1⅞	1.0	½ x ¼	½ x ¼
	1 15/16 to 2	1.0	½ x 3/16 ▼	½ x ¼
2517	½ to 9/16	3.5	⅛ x 1/16	⅛ x 1/16
	⅝ to ⅞	3.4	3/16 x 3/32	3/16 x 3/32
	15/16 to 1¼	3.3	¼ x ⅛	¼ x ⅛
	1 5/16 to 1⅜	3.2	5/16 x 5/32	5/16 x 5/32
	1 7/16 to 1¾	3.0	⅜ x 3/16	⅜ x 3/16
	1 13/16 to 2¼	2.4	½ x ¼	½ x ¼
	2 5/16 to 2½	1.9	⅝ x 3/16 ▼	⅝ x 5/16
2525	¾ to ⅞	4.9	3/16 x 3/32	3/16 x 3/32
	15/16 to 1¼	4.7	¼ x ⅛	¼ x ⅛
	1 5/16 to 1⅜	4.5	5/16 x 5/32	5/16 x 5/32
	1 7/16 to 1¾	4.2	⅜ x 3/16	⅜ x 3/16
	1 13/16 to 2¼	3.3	½ x ¼	½ x ¼
	2 5/16 to 2½	2.5	⅝ x 3/16 ▼	⅝ x 5/16
3020	15/16 to 1¼	6.5	¼ x ⅛	¼ x ⅛
	1 5/16 to 1⅜	6.3	5/16 x 5/32	5/16 x 5/32
	1 7/16 to 1¾	6.0	⅜ x 3/16	⅜ x 3/16
	1 13/16 to 2¼	5.3	½ x ¼	½ x ¼
	2 5/16 to 2¾	4.5	⅝ x 5/16	⅝ x 5/16
	2 13/16 to 3	3.9	¾ x ¼ ▼	¾ x ⅜
3030	15/16 to 1¼	9.2	¼ x ⅛	¼ x ⅛
	1 5/16 to 1⅜	8.9	5/16 x 5/32	5/16 x 5/32
	1 7/16 to 1¾	8.6	⅜ x 3/16	⅜ x 3/16
	1 13/16 to 2¼	7.6	½ x ¼	½ x ¼
	2 5/16 to 2¾	6.2	⅝ x 5/16	⅝ x 5/16
	2 13/16 to 3	5.0	¾ x ¼ ▼	¾ x ⅜

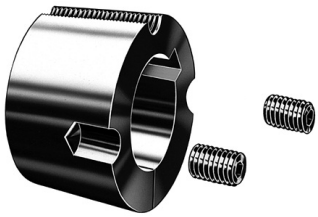

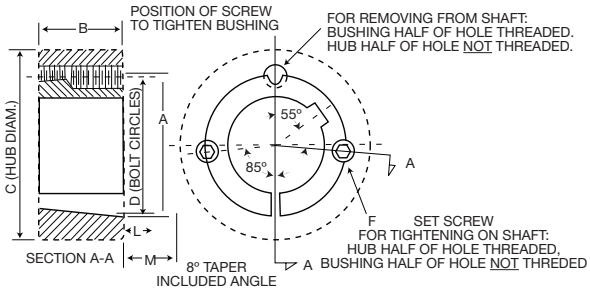

Dimensions

Bushing Number	A	B	CØ Class 20 Gray Iron	CØ Class 30 Gray Iron	CØ Steel	D	F†	L★ Standard Hex. Key	L★ Short Key‡	M★★ Standard Hex. Key	M★★ Short Key‡
1008	1.386	⅞	2⅜	2 3/16	1 15/16	1 21/64	¼ x ½	1⅛	⅝	1¼	¾
1108	1.511	⅞	2½	2 9/16	2 1/16	1 29/64	¼ x ½	1⅛	⅝	1¼	¾
1210	1⅞	1	3⅝	3¼	2⅞	1¾	⅜ x ⅝	1⅜	13/16	1⅝	1 1/16
1215	1⅞	1½	3⅛	2⅞	2⅝	1¾	⅜ x ⅝	1⅜	13/16	1⅝	1 1/16
1310	2	1	3¾	3⅜	3	1⅞	⅜ x ⅝	1⅜	13/16	1⅝	1 1/16
1610	2¼	1	4	3⅝	3¼	2⅛	⅜ x ⅝	1⅜	13/16	1⅝	1 1/16
1615	2¼	1½	3½	3¼	3	2⅛	⅜ x ⅝	1⅜	13/16	1⅝	1 1/16
2012	2¾	1¼	4¾	4⅜	3⅞	2⅝	7/16 x ⅞	1 9/16	15/16	2	1⅜
2517	3⅜	1¾	5½	4⅞	4⅜	3¼	½ x 1	1⅝	1	2¼	1⅝
2525	3⅜	2½	4¾	4½	4¼	3¼	½ x 1	1⅝	1	2¼	1⅝
3020	4¼	2	7	6¼	5⅝	4	⅝ x 1¼	1 13/16	1 3/16	2 11/16	2 1/16
3030	4¼	3	6¼	5¾	5⅜	4	⅝ x 1¼	1 13/16	1 3/16	2 11/16	2 1/16

Bushings cannot be bored larger than largest bore listed.

For detail dimensions required for machining hubs, consult factory.

▼ Key furnished for these sizes only.

Ø For general reference. Severe conditions may require larger hub. Heavy well-located web may permit smaller hub. Hub diameter required depends on the particular application. Consult Martin giving full information on the proposed design. Hub diameters shown are based on 20,000, 30,000, and 50,000 P.S.I. minumum ultimate tensile strength respectively for Class 20 gray iron, Class 30 gray iron, and steel hubs.

† 2 screws required. Use in positions shown for tightening bushing on shaft. In removing bushing from shaft, remove screws and use one of them in the other hole. Bushing price includes screws.

★ Space required to tighten bushing. Also space required to loosen screws to permit removal of hub by puller.

★★ Space required to loosen bushing using one screw as jackscrew — no puller required.

‡ Standard hex key cut to minimum usable length.

Taper Bushings Dimensions

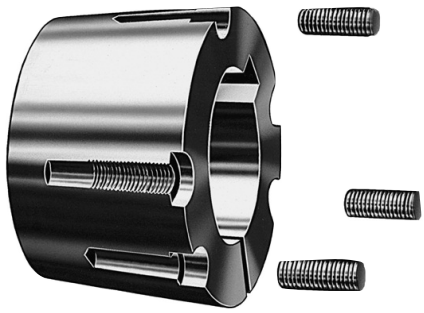

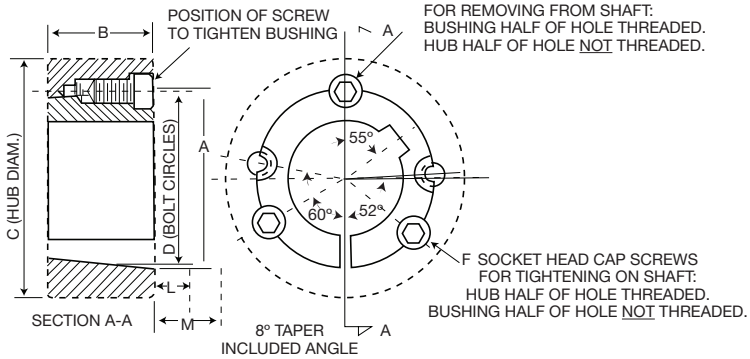

No. 3535 to 5050 Bushings

Bushing Number	Bore	Weight	Bushing Keyseat	Shaft Keyseat	A	B	CØ Class 20 Gray Iron	CØ Class 30 Gray Iron	CØ Steel	D	F†	G	R
3535	1 3/16 to 1 1/4	14	1/4 x 1/8	1/4 x 1/8									
	1 5/16 to 1 3/8	14	5/16 x 5/32	5/16 x 5/32									
	1 7/16 to 1 3/4	13	3/8 x 3/16	3/8 x 3/16									
	1 13/16 to 2 1/4	12	1/2 x 1/4	1/2 x 1/4	5	3 1/2	7 3/4	7	6 1/2	4.83	1/2 x 1 1/2	39°	▲
	2 5/16 to 2 3/4	11	5/8 x 5/16	5/8 x 5/16									
	2 13/16 to 3 1/4	9	3/4 x 3/8	3/4 x 3/8									
	3 3/16 to 3 1/2	8	▼5/8 x 1/4	5/8 x 7/16									
4040	1 7/16 to 1 3/4	22	3/8 x 3/16	3/8 x 3/16									
	1 13/16 to 2 1/4	21	1/2 x 1/4	1/2 x 1/4									
	2 5/16 to 2 3/4	19	5/8 x 5/16	5/8 x 5/16									
	2 13/16 to 3 1/4	17	3/4 x 3/8	3/4 x 3/8	5 3/4	4	9 1/2	8 1/2	7 3/4	5.54	5/8 x 1 3/4	40°	▲
	3 3/16 to 3 5/8	15	7/8 x 7/16	7/8 x 7/16									
	3 11/16 to 3 3/4	14	7/8 x 7/16	7/8 x 7/16									
	3 13/16 to 4	13	▼1 x 1/4	1 x 1/2									
4545	1 15/16 to 2 1/4	30	1/2 x 1/4	1/2 x 1/4									
	2 5/16 to 2 3/4	28	5/8 x 5/16	5/8 x 5/16									
	2 13/16 to 3 1/4	26	3/4 x 3/8	3/4 x 3/8	6 3/8	4 1/2	10 1/2	9 1/2	8 3/4	6.13	3/4 x 2	40°	▲
	3 5/16 to 3 3/4	23	7/8 x 7/16	7/8 x 7/16									
	3 13/16 to 4 1/4	20	1 x 1/2	1 x 1/2									
	4 5/16 to 4 1/2	18	▼1 x 1/4	1 x 1/2									
5050	2 5/16 to 2 3/4	38	5/8 x 5/16	5/8 x 5/16									
	2 13/16 to 3 1/4	35	3/4 x 3/8	3/4 x 3/8									
	3 5/16 to 3 3/4	32	7/8 x 7/16	7/8 x 7/16	7	5	11 1/2	10 1/2	9 1/2	6.72	7/8 x 2 1/4	37°	▲
	3 13/16 to 4 1/2	27	1 x 1/2	1 x 1/2									
	4 9/16 to 5	24	▼1 1/4 x 7/16	1 1/4 x 5/8									

Bushings cannot be bored larger than largest bore listed.

For detail dimensions required for machining hubs, consult factory.

▼ Key furnished for these sizes only.

Ø For general reference. Severe conditions may require larger hub. Heavy well-located web may permit smaller hub. Hub diameter required depends on the particular application. Consult factory giving full information on the proposed design. Hub diameters shown are based on 20,000, 30,000, and 50,000 P.S.I. minumum ultimate tensile strength respectively for Class 20 gray iron, Class 30 gray iron, and steel hubs.

† 3 screws required. Use in positions shown for tightening bushing on shaft. In removing bushing from shaft, remove screws and use two of them in the other two holes. Bushing price includes screws. See following footnote.

▲ Provide sufficient space to tighten and loosen bushing. Width across flats of screw head is same as screw diameter which is shown in column F.

Taper Bushings Dimensions

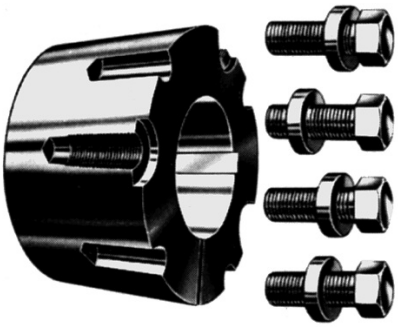

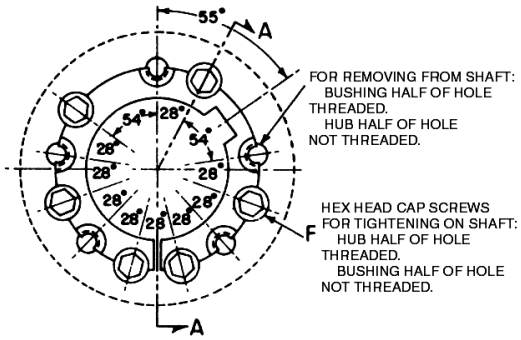

NO. 120100

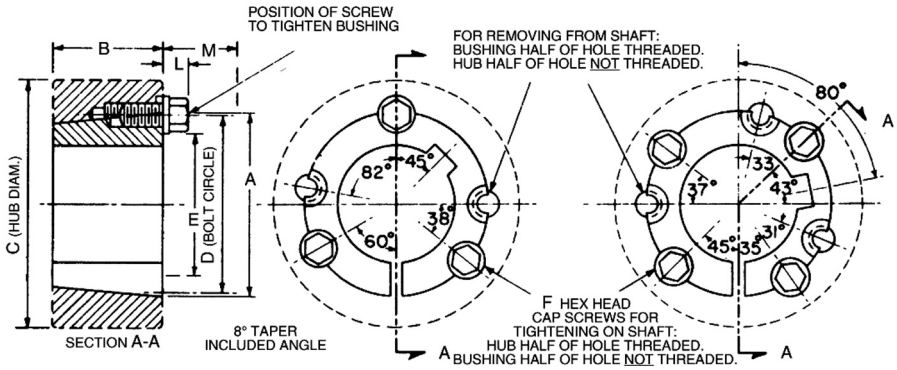

6050 7060 TO 10085

No 6050 to 120100 Taper Bushings

Bush Number	Bore	Weight	Bushing Keyseat	Shaft Keyseat	A	B	CØ Class 20 Gray Iron	CØ Class 30 Gray Iron	CØ Steel	D	E	F†	L★	M★★
6050	3 13/16 to 4½ 4 9/16 to 5½ 5 9/16 to 6	60 55 50	1 x ½ 1¼ x ⅝ 1½ x ¾	1 x ½ 1¼ x ⅝ 1½ x ¾	9¼	5	17	15½	13½	9	6¾	1¼ x 3½	1⅝	4⅜
7060	4 9/16 to 5½ 5 9/16 to 6½ 6 9/16 to 7	85 75 65	1¼ x ⅝ 1½ x ¾ 1¾ x ¾	1¼ x ⅝ 1½ x ¾ 1¾ x ¾	10¼	6	18½	17	14¾	10	7¾	1¼ x 3½	1⅝	4⅜
Φ8065	5 1/16 to 5½ 5 9/16 to 6½ 6 9/16 to 7½ 7 9/16 to 8	120 105 90 75	1¼ x ⅝ 1½ x ¾ 1¾ x ¾ 2 x ¾	1¼ x ⅝ 1½ x ¾ 1¾ x ¾ 2 x ¾	11¼	6½	19	17½	15½	11	8¾	1¼ x 3½	1⅝	4⅜
Φ10085	6 9/16 to 7½ 7 9/16 to 9 9 1/16 to 10	260 230 190	1¾ x ¾ 2 x ¾ 2½ x ⅞	1¾ x ¾ 2 x ¾ 2½ x ⅞	14¾	8½	23½	22	19½	14½	11¾	1½ x 4¼	2	5⅜
Φ120100	7 9/16 to 9 9 1/16 to 11 11 1/16 to 12	410 360 290	2 x ¾ 2½ x ⅞ 3 x 1	2 x ¾ 2½ x ⅞ 3 x 1	17¼	10	28	26	23	17	14¼	1½ x 4¼	2	5⅜

Bushings cannot be bored larger than largest bore listed.

For detail dimensions required for machining hubs, consult Martin.

Ø For general reference. Severe conditions may require larger hub. Heavy well- located web may permit smaller hub. Hub diameter required depends on the particular application. Consult Martin giving full information on the proposed design. Hub diameters shown are based on 20,000, 30,000, and 50,000 P.S.I. minumum ultimate tensile strength respectively for Class 20 gray iron, Class 30 gray iron, and steel hubs.

† 3 screws for 6050; four for 7060 to 10085; six for 120100. Use in positions shown for tightening bushing on shaft. In loosening bushing, remove screws and use all except one in the other holes. Bushing price includes screws.

★ Space required to tighten bushing. Also space required to loosen screws to permit removal of hub by puller.

★★ Space required to loosen bushing using screws as jackscrews— no puller required.

Φ Not currently stocked — Available on order.

Taper Bushed Type S-Type W Weld-On Hubs Dimensions

Martin Taper Bushed Type S Weld-On Hubs are suitable for use in many applications such as for welding to plate steel sprockets. The outside diameters of these hubs have been reduced to a minimum. This is permissible because of the reinforcing strength of the items to which they are to be welded. Cases where the attached item is of small dimensions should be referred to Martin.

Type S Weld-On Hubs are made of steel, drilled, tapped, and taper bored for Tapered Bushings. Their small size and the convenience and advantages of Taper Bushed construction make them of great value on many devices for use on shafts.

Type S

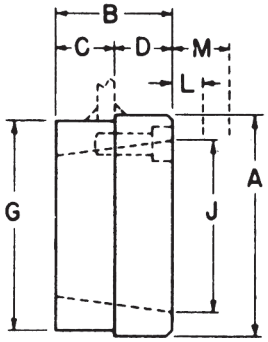

Taper Bushed Type S Weld-On Hubs

Hub Number	For Use with Bushing Number	Max. Bore of Bushing	Weight	A	BΦ	C★★	D▼	G	J
S16-4	1610	1⅝	.9	3	1	.275	.725	2⅞ †	2¼
S16-6	1610	1⅝	.9	3	1	.450	.550	2⅞ †	2¼
S20-6	2012	2	1.8	3 9/16	1¼	.450	.800	3 7/16 †	2¾
S20-8	2012	2	1.4	3 9/16	1¼	.570	.680	3 7/16 †	2¾
S25-6	2517	2½	2.6	4¼	1¾	.450	1.300	4⅛ †	3⅜
S25-8	2517	2½	2.6	4¼	1¾	.565	1.185	4⅛ †	3⅜
S25-10	2517	2½	2.5	4¼	1¾	.685	1.065	4⅛ †	3⅜
S25-16	2517	2½	2.4	4¼	1¾	1.090	.660	4⅛ †	3⅜
S30-10	3020	3	4.3	5¼	2	.675	1.325	5⅛ †	4¼
S30-16	3020	3	4.2	5¼	2	1.090	.910	5⅛ †	4¼
S35	3535	3½	12.8	6½	3½	1.160	2.340	6⅝ Ø	5

See dimension tables on preceeding page for bushing data and wrench space required.
† + .000-.002
Φ + .005-.010
Ø + .001-.003
▼ + .000-.005
★★ + .010-.010

Type W Weld-On Hubs are made of steel, drilled, tapped, and taper bored to receive Tapered Bushings. They are very useful for welding into fan rotors, pulleys, plate sprockets, impellers, agitators, and many other devices which must be firmly fastened to the shaft.

Type WA

Taper Bushed Type WA Weld-On Hubs

Hub Number	For Use with Bushing Number	Max. Bore of Bushing	Weight	A	B	C	D	F	G	H	J	K
WA12	1215	1¼	1.3	2⅛	1½	⅜	⅝	⅜	2½†	2⅜	1⅞	2⅝
WA16	1615	1⅝	1.5	3¼	1½	⅜	⅝	⅜	2⅞†	2¾	2¼	3
WA25	2517	2½	4.0	4⅞	1¾	½	¾	⅜	4⅜†	4¼	3⅜	4⅝
WA30	3030	3	8.6	5½	3	¾	¾	¼	5⅛†	4 13/16	4⅛	5
WA35	3535	3½	15	6¾	3½	1¼	1	⅜	6¼†	5 15/16	5	6
WA40	4040	4	29	7¾	4	1½	1	⅜	7¼†	6⅞	5¾	7
WA45	4545	4½	42	8¾	4½	1¾	1	⅜	8†	7⅝	6⅜	8
WA50	5050	5	57	9½	5	1¾	1	⅜	8¾•	8⅜	7	8¾
WA60	6050	6	115	13¼	5	1¾	1¼		12¼★	11⅞	9¼	
WA70	7060	7	155	14½	6	2¼	1¼		13½★	13¼	10¼	
WA80	8065	8	180	15¼	6½	2¼	1¼		14¼★	14	11¼	
WA100	10085	10	340	19¾	8½	3½	1½		18¾★	18¼	14¾	

See dimension tables on preceeding page for bushing data and wrench space required.
† + .000-.002
• + .000-.003
★ + .000-.004

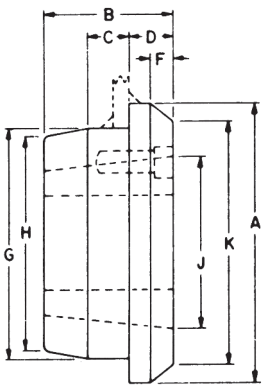

WA12 To WA50

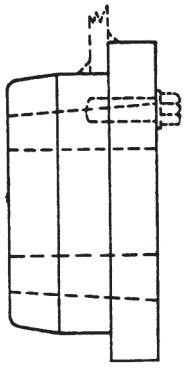

WA60 To WA100

Taper Bushings
Metric and Reborable

Stock Taper Bushings With Metric Bores and Keyways

★Metric Bores	★Metric Keyway	Taper Bushing Number			
14, 16	5 x 2.3	1008 1215	1108 1610	1210 1615	
18, 19 20, 22	6 x 2.8	1008 1610	1108 1615	1210 2012	1215 2517
24	8 x 3.3	1108 1610	1210 1615	1215 2012	 2517
25	8 x 3.3	1210 1615	1215 2012	1610 2517	
28, 30	8 x 3.3	1210 1615	1215 2012	1610 2517	 3020
32	10 x 3.3	1610 2012	1615 2517	 3020	
35	10 x 3.3	1610 2012	1615 2517	 3020	
38	10 x 3.3	1610 2012	1615 2517	 3020	
40, 42	12 x 3.3	2012 2517	 3020		
45, 48	14 x 3.8	2012 2517	 3020		
50 55	14 x 3.8 16 x 4.3	2517 2517	3020 3020		

★ Millimeter Bores and Keyways from ISO Std. R773. 1″= 25.4 millimeters

NOTE: For other metric bore sizes consult factory.

Stock Reborable Taper Bushings With No Keyways

Sintered Steel		Gray Iron		Steel		Stainless Steel	
1008 1108	9/16 ½			1008 1108	½ ½	1008 1108	½
1210 1215	9/16 ½			1210 1215	½ ½	1210 1215	½
1310 1610	½ ½ 1 5/16			1310 1610	 ½	1310 1610	 ½
1615 2012	½ 1 5/16 ½			1615 2012	½ ½	1615 2012	 ½
2517	½ 1 9/16	 2525	 2⅛	2517 2525	½	2517 2525	½
3020	15/16 1 11/16	3020 3030	15/16 1 7/16 2 15/16 15/16 2 7/16 2 15/16	3020 3030	15/16	3020 3030	15/16
		3535 4040	1 3/16 2 7/16 2 15/16 1 7/16 3 7/16 3 15/16	3535 4040		3535 4040	
		4545 5050	3 15/16 4 7/16 2 7/16 3 15/16	4545		4545	
		6050 7060	3 7/16 5 7/16 3 15/16				
		8065 10085	4 7/16 7				
		120100	8				

★ Not currently stocked. Consult factory for availability and pricing.

MST® Bushings

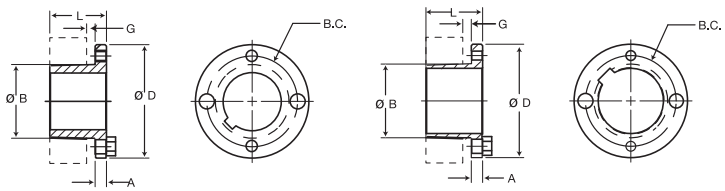

TYPE 1 TYPE 2

"G" & "H" BUSHINGS

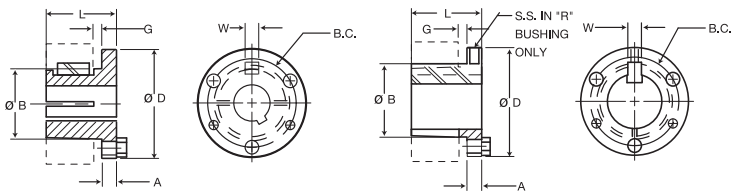

TYPE 1 TYPE 2

"P", "Q", & "R" BUSHINGS

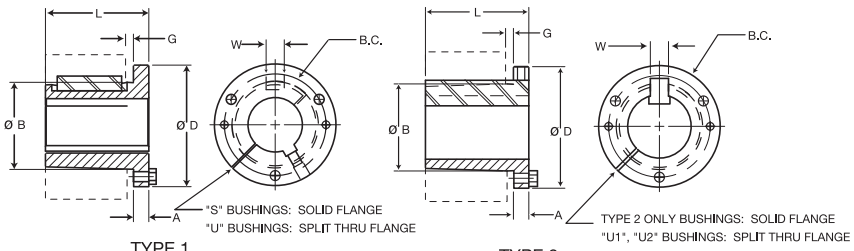

TYPE 1 TYPE 2

"S" & "U" BUSHINGS

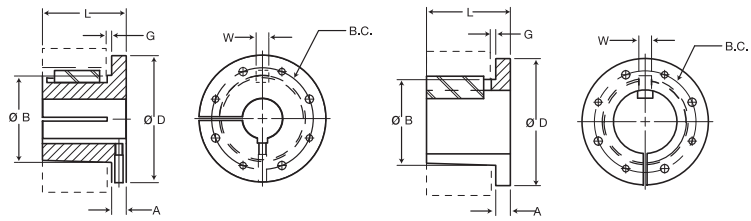

TYPE 1 TYPE 2

"W" BUSHINGS

Bushing Specifications

Part No.	Dimensions							Stock Bore Range		Cap Screws		Av. Wt. Lbs.	Wrench Torque In. / lbs.
	D	L	A	B Large End	G	B.C.	W	Type 1	Type 2	No.	Size		
G	2.00	1.00	0.25	1.1720	0.19	1.56	—	3/8 - 15/16	1	2	1/4X5/8	0.5	95
H	2.50	1.25	0.25	1.6250	0.19	2.00	—	3/8 - 1-3/8	1-7/16 - 1-1/2	2	1/4X3/4	0.8	95
P1	3.00	1.94	0.41	1.9375	0.22	2.44	0.375	1/2 - 1-7/16	1-1/2 - 1-3/4	3	5/16X1	1.3	192
P2	3.00	2.94	0.41	1.9375	0.22	2.44	0.375	3/4 - 1-7/16	1-1/2 - 1-3/4	3	5/16X1	1.5	192
P3	3.00	4.44	0.41	1.9375	0.22	2.44	0.375	1-1/8 - 1-3/8	1-5/8	3	5/16X1	2	192
Q1	4.12	2.50	0.53	2.8750	0.22	3.38	0.500	3/4 - 2-1/16	2-1/8 - 2-11/16	3	3/8X1-1/4	3.5	348
Q2	4.12	3.50	0.53	2.8750	0.22	3.38	0.500	1 - 2-1/16	2-1/8 - 2-5/8	3	3/8X1-1/4	4.5	348
Q3	4.12	5.00	0.53	2.8750	0.22	3.38	0.500	1-3/8 - 2-1/16	2-1/8 - 2-1/2	3	3/8X1-1/4	5.5	348
R1	5.38	2.88	0.62	4.0000	0.25	4.62	0.750	1-1/8 - 2-13/16	2-7/8 - 3-3/4	3	3/8X1-3/4	7.5	348
R2	5.38	4.88	0.62	4.0000	0.25	4.62	0.750	1-3/8 - 2-13/16	2-7/8 - 3-5/8	3	3/8X1-3/4	11	348
S1	6.38	4.38	0.75	4.6250	0.31	5.38	0.750	1-11/16 - 3-3/16	3-1/4 - 4-1/4	3	1/2X2-1/4	13.5	840
S2	6.38	6.75	0.75	4.6250	0.31	5.38	0.750	1-7/8 - 3-3/16	3-1/4 - 4-3/16	3	1/2X2-1/4	19	840
UO	8.38	5.25	1.06	6.0000	0.44	7.00	1.250	2-3/8 - 3-1/16	—	3	5/8X2-3/4	30	1680
UO	8.38	4.94	0.75	6.0000	0.44	7.00	1.250	3-1/4 - 4-1/4	4-3/8 - 5-1/2	3	5/8X2-3/4	27	1680
U1	8.38	7.12	1.06	6.0000	0.44	7.00	1.250	2-3/8 - 4-1/4	4-3/8 - 5-1/2	3	5/8X2-3/4	40	1680
U2	8.38	10.12	1.06	6.0000	0.44	7.00	1.250	2-7/16 - 4-1/4	4-3/8 - 5	3	5/8X2-3/4	50	1680
W1	12.50	8.25	1.44	8.5000	0.44	10.00	1.250	3-3/8 - 6-3/16	6-1/4 - 7-7/16	4	3/4X3	104	3000
W2	12.50	11.25	1.44	8.5000	0.44	10.00	1.250	3-3/8 - 6-3/16	6-1/4 - 7-7/16	4	3/4X3	133	3000

All tapers are 3/4” per 12" on Dia.
All dimensions are in inches except, as noted.
All bushings are cast iron, ductile iron, sintered steel, or steel. Consult manufacturer for clarification.
Metric bushings also available.

MST® Bushings

Martin MST BUSHING
INSTALLATION & REMOVAL INSTRUCTIONS

The MST bushings are easy to install and remove. They are split through the barrel and have a taper to provide a true clamp on the shaft. They are keyed to both the shaft and the hub to help during "blind" installations.

INSTALLATION

1. Be sure the tapered cone surfaces of the bushing and the inside of the driven product are clean and free of anti-seize lubricants.
2 Place bushing in sprocket or other Martin MST part.
3. Place cap screws loosely in pull-up holes. Bushing remains loose to assure sliding fit on shaft.
4. With key on shaft, slide sprocket to desired position on shaft. Be sure heads of capscrews are accessible.
5. Align sprocket. Tighten screws alternately and progressively - until they are pulled up tight (see table below). Do not use extensions on wrench handles. Do not allow sprocket to be drawn in contact with flange of bushing. There should be a gap between bushing flange and sprocket. CAUTION: THIS GAP MUST NOT BE CLOSED.

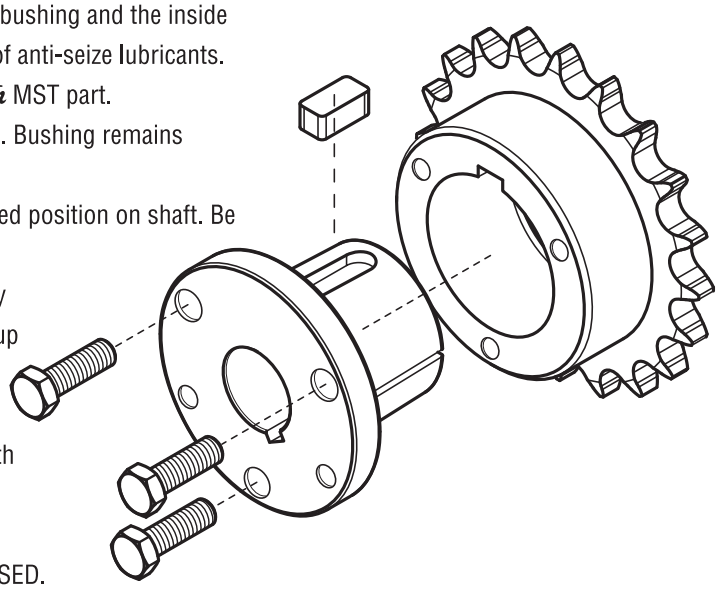

WRENCH TORQUE VALUES FOR TIGHTENING BUSHINGS

MST Bushing Size	Size of Cap Screw	Wrench Torque in. / lbs.
G	1/4 x 5/8	95
H	1/4 x 3/4	95
P	5/16 x 1	192
Q	3/8 x 1-1/4	348
R	3/8 x 1-3/4	348
S	1/2 x 2-1/4	840
U	5/8 x 2-3/4	1680
W	3/4 x 3	3000

REMOVAL

1. Loosen and remove capscrews.
2. Insert capscrews in tapped removal holes.
3. Tighten inserted screws until sprocket is loose on shaft.
4. Remove sprocket from shaft.

CAUTION

WARNING: USE OF ANTI-SEIZE LUBRICANT ON TAPERED CONE SURFACES OR ON BOLT THREADS WHEN MOUNTING MAY RESULT IN DAMAGE TO SHEAVES AND SPROCKETS. THIS VOIDS ALL MANUFACTURER'S WARRANTIES.

WARNING: Because of the possible danger to person(s) or property from accidents which may result from the improper use of products, it is important that correct procedures be followed: Products must be used in accordance with the engineering information specified in the catalog. Proper installation, maintenance and operation procedures must be observed. The instructions given above must be followed. Inspections should be made as necessary to assure safe operation under prevailing conditions. All rotating power transmission products when used in a drive are potentially dangerous and must be guarded by the user as required by applicable laws, regulations, standards, and good safety practice. (Refer to ANSI Standard B15.1.)

MST® Hubs

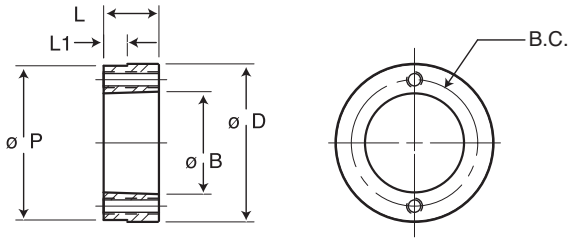

ALL TAPERS 3/4" PER FT.
ON DIAMETER

"H" HUBS

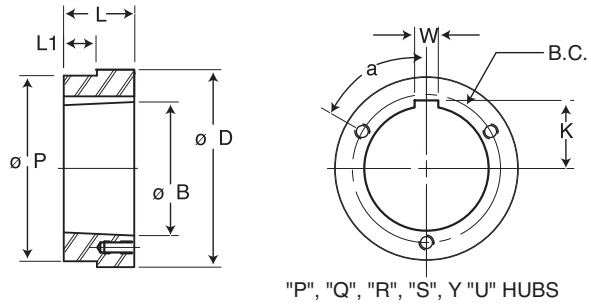

"P", "Q", "R", "S", Y "U" HUBS

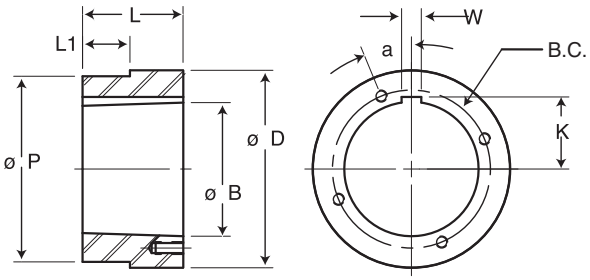

"W" HUBS

Steel Hub Specifications

Part No.	For Bushing	Dimensions D	L	P	L1	B	K	B.C.	W	a°	Tapped Holes No.	Size	Wt. Lbs.
HH1	H	2.50	0.88	2.375	0.174	1.6210	—	2.000	—	—	2	1/4 - 20	0.6
HCH1	H	2.50	0.88	2.375	0.625	1.6210	—	2.000	—	—	2	1/4 - 20	0.7
HP1	P1	3.00	1.31	2.875	0.292	1.9375	1.094	2.438	0.375	60	3	5/16 - 18	1.4
HCP1	P1	3.00	1.31	2.875	1.000	1.9375	1.094	2.438	0.375	60	3	5/16 - 18	1.1
HP2	P2	3.00	2.31	2.875	1.100	1.9375	1.094	2.438	0.375	60	3	5/16 - 18	2.5
HQ1	Q1	4.50	1.75	4.375	0.709	2.8750	1.562	3.375	0.500	60	3	3/8 - 16	4.4
HCQ1	Q1	4.50	1.75	4.375	1.250	2.8750	1.562	3.375	0.500	60	3	3/8 - 16	4.4
HQ2	Q2	4.50	2.75	4.375	1.606	2.8750	1.562	3.375	0.500	60	3	3/8 - 16	6.9
HR1	R1	5.75	2.00	5.625	0.709	4.0000	2.188	4.625	0.750	60	3	3/8 - 16	7.3
HR2	R2	5.75	4.00	5.625	1.606	4.0000	2.188	4.625	0.750	60	3	3/8 - 16	15.4
HS1	S1	6.75	3.31	6.500	0.946	4.6250	2.562	5.375	0.750	60	3	1/2 - 13	17.3
HS2	S2	6.75	5.69	6.500	2.963	4.6250	2.562	5.375	0.750	60	3	1/2 - 13	30.4
HU0	UO	8.50	3.75	8.250	2.000	6.0000	3.250	7.000	1.250	60	3	5/8 - 11	32.0
HU1	U1	8.50	5.62	8.250	2.963	6.0000	3.250	7.000	1.250	60	3	5/8 - 11	44.6
HU2	U2	8.50	8.62	8.250	6.016	6.0000	3.250	7.000	1.250	60	3	5/8 - 11	69.0
HW1	W1	12.50	6.38	12.250	2.963	8.5000	4.562	10.000	1.250	22.5	4	3/4 -10	130.0

All tapers are 3/4" per 12" on Dia.
All dimensions are in inches, except as noted.

QD & MST®
Idler Bushings

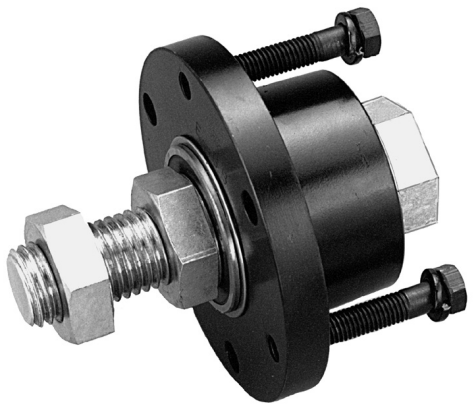

Martin Idler Bushings are designed to accomodate stock V-belt drives, sprockets, timing belt pulleys, or other products that use QD or MST type bushings.

They are equipped with two electric motor grade, permanently lubricated ball bearings, mounted on a precision shoulder bolt. Shoulder bolt and two hex jam nuts are zinc plated.

Installation is made by slipping the threaded shaft through a hole bored in support structure, and tightening the locking nut. Sheaves, sprockets, or other products can be removed without dismounting the idler bushing. Available in sizes as shown below. Boxed complete with all mounting hardware and instructions.

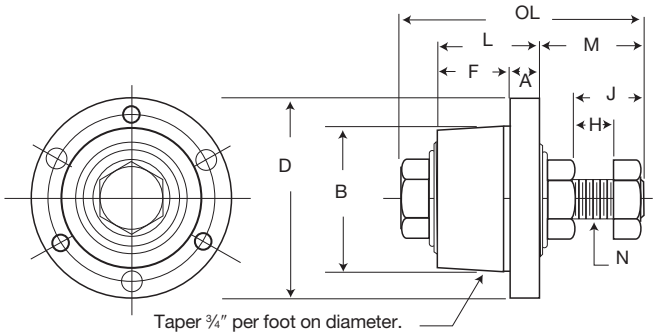

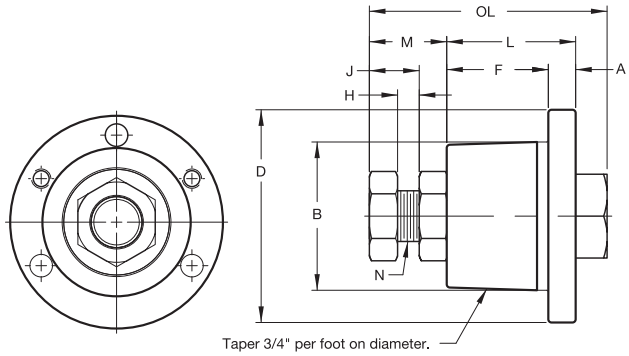

QD Radial Load Ratings (Lbs.) 2500 Hours Service Life

Part Number	RPM				
	100	500	1000	1200	1800
SH-BB	1260	740	580	540	480
SD-BB	1740	1020	800	760	660
SK-BB	2370	1360	1070	1000	880
SF-BB	2550	1500	1180	1100	980
E-BB	4640	2720	2140	2020	1780

Service Temperature Range –40° F Minimum +248° F Maximum

MST Radial Load Ratings (Lbs.) 2500 Hours Service Life

Part Number	RPM				
	100	500	1000	1200	1800
H-BB 1/2	1411	825	655	616	538
P1-BB 5/8	1752	1024	813	765	668
Q1-BB 3/4	2344	1371	1088	1024	894
Q1-BB 1	2555	1494	1186	1116	975

Service Temperature Range –40° F Minimum +248° F Maximum

Part Number	Dimensions									
	A	B	D	F	H	J	L	M	N	OL
SH-BB	7/16	1.871	2 11/16	¾	⅝	15/16	1 5/16	1 5/16	7/16	3 1/16
SD-BB	½	2.187	3 3/16	1¼	11/16	1 1/16	1 13/16	1 9/16	⅝	3⅞
SK-BB	9/16	2.812	3⅞	1¼	¾	1 3/16	1 15/16	1¾	¾	4 9/16
SF-BB	9/16	3.125	4⅝	1¼	¾	1 5/16	2 1/16	2⅛	⅞	5
E-BB	¾	3.834	6	1⅝	1 7/16	2 3/16	2⅝	3 3/16	1⅜	6⅞
H-BB 1/2	¼	1.625	2½	1	⅜	11/16	1¼	1	½	2 9/16
P1-BB 5/8	13/32	1.937	3	1 17/32	17/32	59/64	1 15/16	1 5/16	⅝	3 41/64
Q1-BB 3/4	17/32	2.875	4⅛	1 15/16	5/16	25/32	2½	1¼	¾	4 7/32
Q1-BB 1	17/32	2.875	4⅛	1 15/16	9/32	57/64	2½	1½	1	4 39/64